Vehicle System Dynamics

ISSN: 0042-3114 (Print) 1744-5159 (Online) Journal homepage: www.tandfonline.com/journals/nvsd20

A Review of Four-Wheel Steering Studies from the Viewpoint of Vehicle Dynamics and Control

Yoshimi FURUKAWA, Naohiro YUHARA, Shoichi SANO, Hideo TAKEDA & Yoshinobu MATSUSHITA

To cite this article: Yoshimi FURUKAWA, Naohiro YUHARA, Shoichi SANO, Hideo TAKEDA & Yoshinobu MATSUSHITA (1989) A Review of Four-Wheel Steering Studies from the Viewpoint of Vehicle Dynamics and Control, Vehicle System Dynamics, 18:1-3, 151-186, DOI: 10.1080/00423118908968917

To link to this article: https://doi.org/10.1080/00423118908968917

Published online: 27 Jul 2007.

Submit your article to this journal

Article views: 1223

View related articles

Citing articles: 15 View citing articles

Full Terms & Conditions of access and use can be found at
https://www.tandfonline.com/action/journalInformation?journalCode=nvsd20

Vehicle System Dynamics, 18 (1989), pp. 151-186 0042-3114/89/1801-0151 $ 3.00
© Swets & Zeitlinger

A Review of Four-Wheel Steering Studies from the Viewpoint of Vehicle Dynamics and Control

Yoshimi FURUKAWA*, Naohiro YUHARA**, Shoichi SANO*,
Hideo TAKEDA* and Yoshinobu MATSUSHITA***

SUMMARY

As the four-wheel steering (4WS) system has great potentials, many researchers' attention was attracted to this technique and active research was made. As a result, passenger cars equipped with 4WS systems were put on the market a few years ago. This report tries to identify the essential elements of the 4WS technology in terms of vehicledynamics and control techniques. Based on the findings of this investigation, the report gives an outline and perspective of the research areas involved.

1. INTRODUCTION

For about 100 years since the late 19th century when the first automobile was developed, front wheel steering has been used to control the direction of motor vehicles, except those designed for some special purposes. This steering technique, derived from horse-drawn carriages, had been considered to work tolerably well without causing any serious inconvenience for many decades. It was taken for granted that automobiles should be steered by this method.

As vehicle performance improved, however, people began to feel the need for a quicker response that could change the course of the vehicle as desired, and their efforts were focused on improving the functions of the four wheels based on the idea that only the front wheels could be steered. The cornering force of tires mainly depends on their sideslip angle but it is also affected by their vertical load, camber angle and longitudinal force (i.e., traction and braking forces). Accordingly improvements in this area required some contrivances: The suspension springs, stabilizers and shock absorbers were given better characteristics to properly control the vertical load; the suspension linkage was constructed in such a manner as to control the camber and roll-steer angles within a desirable range; and new devices, including four-wheel drive (4WD) and Anti-lock Brake System, were introduced to reduce the interference of longitudinal force. In addition, "derivative steering system" concept was proposed to steer the front wheels to a desired sideslip angle as quickly as possible [1]. These technical achievements have come from the accumulation of

* Honda R&D Co., Ltd., 1-4-1, Chuo, Wako-shi, Saitama 351-01, JAPAN.
** Nihon University, 7-24-1, Narashinodai, Funabashishi, Chiba 274, JAPAN.
*** Technical R&D Institute, Japan Defense Agency, 2-9-54, Fuchinobe, Sagami-shi, Kanagawa 229. JAPAN.

gradual improvements over the years, and in this context, they can be considered a result of empirical efforts.

If we take a broader view here and look anew at the motor vehicles as a whole, we could perceive the fact that only the front tires are involved in controlling the sideslip angle needed for cornering. The rear tires generate cornering force only by the sideslip angle resulting from vehicle motion. The rear tires are not directly involved in controlling the course of the vehicle. This observation has led to the concept that if the rear wheels were directly steered as well to control the sideslip angle, vehicle lateral movement could be changed more quickly. The idea, theoretical in a sense, of steering the rear wheels simultaneously with the front ones as a means of improving the vehicle performance in lateral motion marks a great, innovative step forward in this technological area based on a drastically different concept.

Steering the rear wheels could help not only reduce a delay in the generation of cornering force but also permit the vehicle path and attitude (a body sideslip angle) to be controlled independently of each other. Making the most of this characteristic would therefore decrease the required motion of the vehicle body around the z-axis and offer better responsiveness during a change in vehicle course. Another favorable result would be a reduction in off-tracking between front and rear tires at low speed which has been annoying inexperienced drivers.

As it came to be known that the four-wheel steering (4WS) system had great potentials as described above, many researchers' attention was attracted to this technique and they carried out active research works. As a result, passenger cars equipped with 4WS systems were put on the market a few years ago. This report tries to identify the essential elements of the 4WS technology in terms of vehicle dynamics and control techniques. Based on the findings of this investigation, the report will then give an outline and perspective of the research areas involved.

2. THEORY OF 4WS

1. Vehicle Dynamics

The steering response of the motor vehicle is represented by two degrees of freedom, a yaw response – rotation – and a lateral acceleration response – translation. The following paragraphs dynamically examine how the yaw and lateral acceleration responses are affected when the rear wheels as well as the front ones are steered.

Through the sideslip angle β of the vehicle body, the yaw rater and the lateral acceleration y are related as follows:

$$\ddot{y} = U_0 (r + \dot{\beta}) \tag{1}$$

where U_0 represents vehicle speed.

As is apparant fromt his equation, the yaw and lateral acceleration responses

to steering are so closely related with each other that these two responses had often been treated similarly before the **4WS** concept was introduced. Within the range where vehicle motion can be approximated by a bicycle model, the transfer functions of yaw and lateral acceleration to the front wheel steer angle can be expressed as follows:

$$\pounds\,(r/\delta_f) = G_r(0)\frac{1 + T_r S}{1 + \frac{2\zeta}{\omega_n} S + \frac{1}{\omega_n^2} S^2} \tag{2}$$

$$\pounds\,(\ddot{y}/\delta_f) = G_{\ddot{y}}(0)\frac{1 + T_1 S + T_2 S^2}{1 + \frac{2\zeta}{\omega_n} S + \frac{1}{\omega_n^2} S^2} \tag{3}$$

Provided

$$G_r(0) = \frac{U_0}{\ell\,(1 + KU_0^2)}, \qquad G\ddot{y}(0) = \frac{U_0^2}{\ell\,(1 + KU_0^2)}$$

$$T_r = \frac{ma}{C_r \ell} U_0, \qquad T_1 = \frac{b}{U_0}, \qquad T_2 = \frac{I_z}{C_r \ell}$$

$$\frac{2\zeta}{\omega_n} = \frac{(C_f a^2 + C_r b^2)\,m + (C_f + C_r)\,I_z}{C_f C_r \ell^2} \cdot \frac{U_0}{1 + KU_0^2}$$

$$\frac{1}{\omega_n^2} = \frac{Izm}{C_f C_r \ell^2} \cdot \frac{U_0}{1 + KU_0^2}$$

$$K = \frac{C_r b - C_f a}{C_f C_r \ell^2} \cdot m$$

Thus the two transfer functions have the same pole locations with close zero locations, showing similar transient characteristics.

Meanwhile the transfer function of yaw and lateral acceleration to the rear-wheel steer angle δr can be written as follows:

$$\pounds\,(r/\delta r) = -\,G_r(0)\frac{1 + T_r' S}{1 + \frac{2\zeta}{\omega_n} S + \frac{1}{\omega_n^2} S^2} \tag{4}$$

$$\pounds\,(\ddot{y}/\delta r) = G_{\ddot{y}}(0)\frac{-1 + T_1' S + T_2' S^2}{1 + \frac{2\zeta}{\omega_n} S + \frac{1}{\omega_n^2} S^2} \tag{5}$$

$$T_r' = \frac{mb}{C_f \ell} U_0, \qquad T_1' = \frac{a}{U_0}, \qquad T_2' = \frac{I_z}{C_r \ell}$$

If the front and rear wheels are steered simultaneously, the yaw and lateral acceleration responses can be obtained by linearly adding equations (2) and (4) and equations (3) and (5), respectively, as shown below [2]:

$$\begin{bmatrix} R \\ S^2 Y \end{bmatrix} = \begin{bmatrix} G_r(0)\dfrac{1+T_r S}{1+\dfrac{2\zeta}{\omega_n}S+\dfrac{1}{\omega_n^2}S^2} & -G_r(0)\dfrac{1+T_r' S}{1+\dfrac{2\zeta}{\omega_n}S+\dfrac{1}{\omega_n^2}S^2} \\ G_{\ddot{y}}(0)\dfrac{1+T_1 S+T_2 S^2}{1+\dfrac{2\zeta}{\omega_n}S+\dfrac{1}{\omega_n^2}S^2} & G_{\ddot{y}}(0)\dfrac{-1+T_1' S+T_2' S^2}{1+\dfrac{2\zeta}{\omega_n}S+\dfrac{1}{\omega_n^2}S^2} \end{bmatrix} \begin{bmatrix} \Delta_f \\ \Delta_r \end{bmatrix} \quad (6)$$

where

$$R = \pounds[r],\ S^2 Y = \pounds[\ddot{y}],\ \Delta_f = \pounds[\delta_f],\ \Delta_r = \pounds[d_f]_o$$

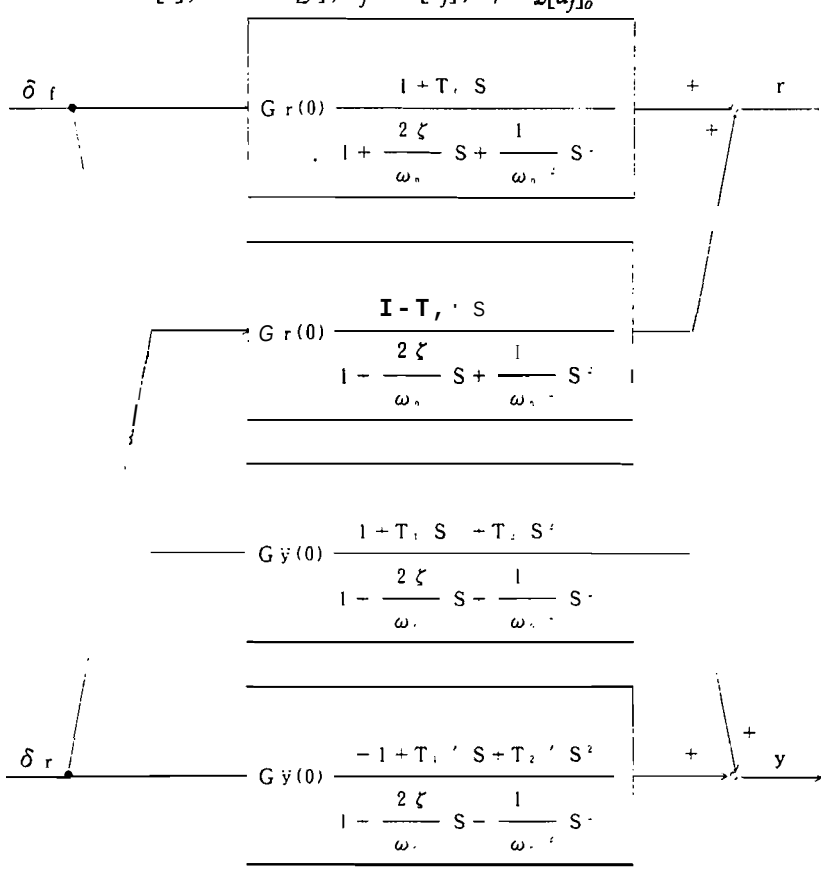

Fig. 1. Block diagram of vehicle response to steer angles of front and rear wheel

A block diagram for equation **(6)** is given in Fig. 1.

When the steering response characteristics of the vehicle are close to neutral as $K \fallingdotseq 0$, we can assume $Tr \fallingdotseq Tr'$. Accordingly the transfer functions of yaw rate to the front and rear steer angles in equation **(6)** are roughly equal not only in poles but also in zeros. If the rear wheels are steered simultaneously with the front ones, therefore, the transient response characterictics of the yaw rate do not change drastically.

Meanwhile the transfer functions of lateral acceleration responses to the front and rear steer angles in the equation are equal in pole location but differ in zero location. This means that the transient response characteristics of lateral acceleration can be changed significantly by steering the rear wheels simultaneously with the front ones.

If the front and rear wheels are steered simultaneously, therefore, the lateral acceleration response can be set independently of the yaw rate response. In other words, the 4WS system can vary the degree of coupling of the vehicle's rotation and translation, which has been narrowly limited in the conventional front-wheel steering (2WS) system. It may be argued that the 4WS can considerably increase the availability of these two degrees of freedom.

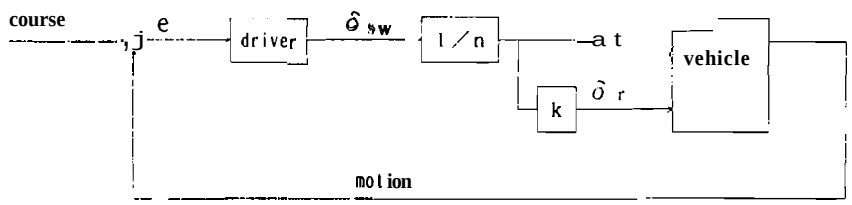

Fig. 2. Feed-forward control of rear wheel steer angle.

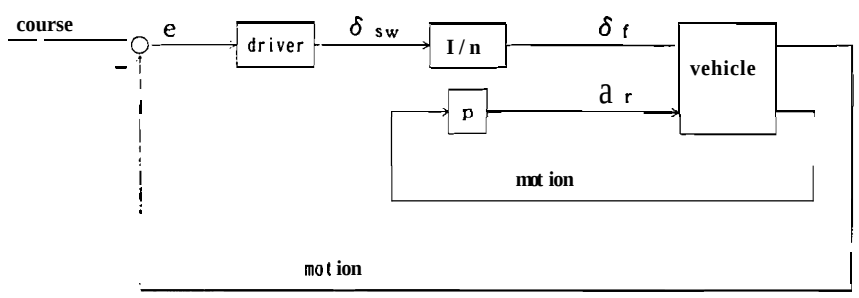

Fig. 3. Feedback control of rear wheel steer angle.

2. Control Strategy

The control system for the 4WS comes in two configurations; one has only feed-forward compensation strategy as in Fig. 2, while the other can make feedback compensation as in Fig. 3. Naturally the former has a relatively simple composition. In a driver-vehicle system, feedback loop is provided by the

and therefore, it is expected that a system using the feed-forward-only 4WS can make correction steering against such external disturbances as a side wind and a rough road. This means that the feed-forward control system is a practical technique. In feed-forward compensation, even if a course deviation is generated by a side wind, the rear wheels remain unsteered as long as the steering wheel angle is fixed. Under this condition, the 4WS car behaves in the same manner as the conventional 2WS car. But, even in a feed-forward control mode, if steering effort is given as input, in the state of the steering wheel free, for instance, the 4WS car has much greater stability against a side wind than the 2WS car [3, 4].

The other control system which has feedback loop can settle to the desired course more quickly and reduce the effects of external disturbances even if the driver does not make correction steering. This gives the 4WS an advantage in that it can to some extent cope with uncertainties in vehicle dynamics and driving environment. Some problems still remain uncleared, however, specifically the system stability during a greater change in the vehicle dynamic characteristics and interference between the driver's operation and the control system.

3. RESEARCH ACTIVITIES

Studies are being made on various 4WS control principles both in the feed-forward and feedback compensation configurations. In these control principles, the following steering response characteristics are envisaged as desirable control objectives:

- Shorter phase lags in lateral acceleration and yaw responses;
- Reduction in sideslip angle (off-tracking) of the vehicle body;
- Stability augmentation;
- Better maneuverability at low speed;
- Achievement of the desired steering responses (model-matching/model-following control);
- Maintenance of the desired steering response characteristics against changes in vehicle parameters (adaptive control);
  and
- Better responses near the limits of tire adhesion.

These items are not independent of one another but they have close dynamic interrelations. Accordingly each of the 4WS control principles achieves some of these multiple requirements. This section discusses the dynamic relationship among steering response characteristics envisaged in each control principle and presents the principles having close direct relations to these control objectives in an effort to clearly identify the tasks of the research activities involved.

(i) Reduction of Phase Lags in Lateral Acceleration and Yaw Responses

The motor vehicle is subject to increase in time delay in lateral acceleration and yaw responses to steering as its speed increases. To maintain its stability as a closed-loop system, therefore, the driver has to advance the phase lead in his steering control to compensate for increasing delays in vehicle responses. Since this compensation gives an additional work load to the driver, it is desirable that the delay in vehicle steering response be minimized.

From this viewpoint, Sano et al. proposed a feed-forward control 4WS designed to steer the rear wheels proportionally in the same direction ,as the front ones, as described in Fig. 2, in an attempt to reduce the delay in the vehicle's lateral acceleration responses [2]. Based on mathematical model analyses and drum-type lateral motion simulator tests, they conducted a series of studies to find the effects of change in vehicle steering response characteristics on the control performance of the driver-vehicle system by quantitatively relating the rear-to-front steer angle ratio and the vehicle steering responses [5-9].

In the control method shown in Fig. 2 which steers the rear wheels at the ratio k to the front wheels, according to the findings of these studies, the responses of the yaw rate r and the lateral acceleration y to the steering wheel angle δsw can be written, from equation (6), as follows:

$$\pounds\,[r/\delta sw] = \frac{1-k}{n}\,G_r(0)\,\frac{1+(1+A,)\,T_r S}{1+\frac{2\zeta}{\omega_n}S+\frac{1}{\omega_n^2}S^2} \tag{7}$$

$$\pounds\,[\ddot{y}/\delta sw] = \frac{1-k}{n}\,G_{\ddot{y}}(0)\,\frac{1+(1+\lambda_1)\,T_1 S+(1+\lambda_2)\,T_2 S^2}{1+\frac{2\zeta}{\omega_n}S+\frac{1}{\omega_n^2}S^2} \tag{8}$$

where

$$\lambda_r = \frac{k}{1-k}\cdot\frac{T_r - T_r'}{T_r},\quad \lambda_1 = \frac{k}{1-k}\cdot\frac{T_1+T_1'}{T_1},\quad \lambda_2 = \frac{k}{1-k}\cdot\frac{T_2+T_2'}{T_2}$$

If the vehicle response characteristics are close to neutral steer as $k \fallingdotseq 0$, it follows:

$$\lambda_r \fallingdotseq 0,\quad \lambda_1 \fallingdotseq \lambda_2 \triangleq \lambda = \frac{2k}{1-k}$$

Hence equations (7) and (8) can be rewritten as:

$$\pounds\,[r/\delta sw] = \frac{1-k}{n}\,G_r(0)\,\frac{1+T_r S}{1+\frac{2\zeta}{\omega_n}S+\frac{1}{\omega_n^2}S^2} \tag{9}$$

$$\mathcal{L}[\ddot{y}/\delta sw] = \frac{1-k}{n} G_{\ddot{y}}(0) \frac{1+(1+\lambda)T_1 S + (1+\lambda)T_2 S^2}{1+\frac{2\zeta}{\omega_n}S + \frac{1}{\omega_n^2}S^2} \tag{10}$$

In the feed-forward control **4WS** which steers the rear wheels in proportion to the front ones, as is apparent from the above expressions, the transient response characteristics of the yaw rate do not differ appreciably from those of the 2WS system; only the transient response characteristics of the lateral acceleration vary significantly. If the rear wheels are steered in the same direction as the front ones, but in a smaller angle than the front wheel steer angle, $A > 0$ because $0 < k < 1$. Accordingly the lead time constant in equation (10) increases at the rate of λ and the delay in lateral acceleration response decreases. Fig. 4 shows the results of calculating the frequency responses of the lateral acceleration and yaw rate when the value of k is varied [5].

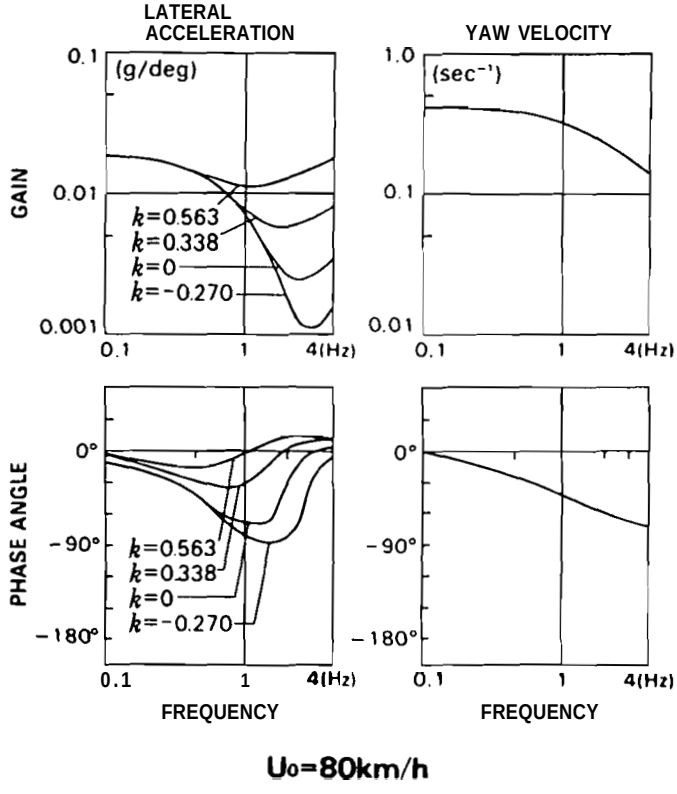

Fig. 4. Vehicle steering response (analytical result)

As is apparent from equations (9) and (10), characteristic equation in the feed-forward control 4WS does not differ from that in the 2WS system. Therefore its stability as an open-loop characteristic with a fixed steering wheel angle does not differ from the 2WS either.

To find the effects of lateral acceleration phase lags on the control performances of drivers, Sano et al. conducted a series of closed-loop tests on a drum-type lateral motion simulator using an experimental 4WS vehicle that could vary the setting of the rear-to-front steer angle ratio. During these tests, the yaw response was kept constant in accordance with equation (9), while the lateral acceleration response was changed according to equation (10) with the

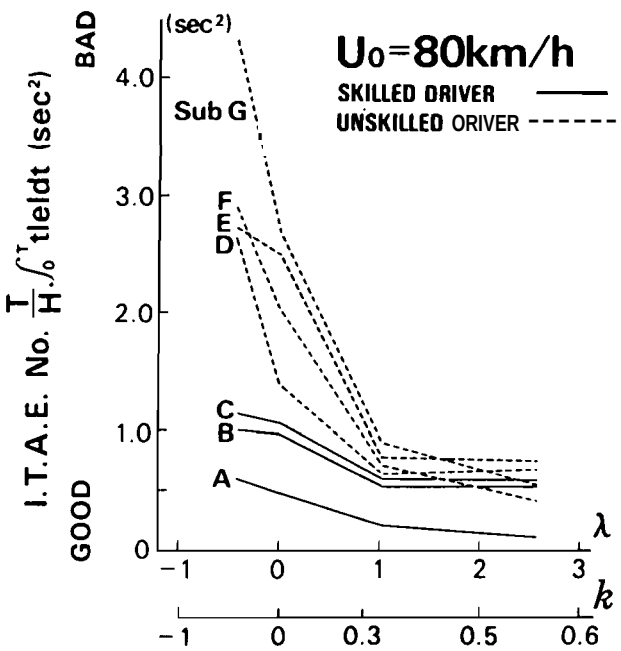

Fig. 5. Driver vehicle performance in lane change test.

lead time constant varied at the rate of A. Fig 5 shows typical results of the course tracking and sudden lane change tests conducted on drivers of widely varying skill levels. The findings can be summarized as follows:

1) When the rear wheels were steered in the same direction as the front ones to reduce the phase lag in lateral acceleration, driver's objective task performances and subjective ratings improved appreciably even though the yaw response remained unchanged.
2) These favorable effects of the 4WS were more remarkable with unskilled drivers than with skilled drivers.

Another series of studies were conducted by Vanderploeg et al. on a 4WS system designed to steer the rear wheels in proportion to the front ones [10].

According to their report, if the steering wheel operation needed to follow the desired path is found by a linear inverse model and then the rear wheels are steered in the same directon as the front ones, the steering frequency would lower appreciably, and therefore, the driver would be able to follow the given path more easily.

In the conventional 2WS car, the value of T_r in equation (2) increases proportionally as the vehicle speed increases, but T_1 in equation (3) decreases with a rise in vehicle speed, and T_2 remains constant whatever the vehicle speed may be. The higher the vehicle speed is, therefore, the more the lateral acceleration response delays, compared with the yaw rate. For the reasons of these studies of vehicle dynamics, it can be argued that a control technique to reduce mainly the delay in lateral acceleration by the feed-forward control which steers the rear wheels proportionally in the same direction as the front wheels at high vehicle speed is a reasonable system.

If feed-forward compensation is made for such rear steer angle control, a gain in steering response also differs from that of 2WS. As is obvious from equations (7) and (8), a steady-state gain of the 4WS car is $(1 - k)$ times that of the 2WS. If the rear wheels are steered in the same direction as the front ones during high speed driving, therefore, the 4WS system's steady-state gain can be lowered below that of the 2WS.

A transient gain in lateral acceleration in a higher frequency range can be made to decrease at a lower rate by steering the rear wheels in the same direction as the front ones, and compared with the 2WS, quick response can be maintained up to higher speed of steering wheel operation.

When the vehicle has a strong understeer character, i.e., when K is a positive number larger than a certain amount, steering the rear wheels in the same direction as the front ones will lead to $\lambda r < 0$ in equation (7), slightly increasing the phase lag in yaw rate response. As a 4WS control method for reducing phase lags in yaw rate as well as in lateral acceleration, Shibahata et al. proposed a control technique that would delay rear wheel steering, compared with the front wheels [11]. This method can not only reduce the phase lag in yaw rate but also more significantly decrease the phase lag in lateral acceleration in a low frequency range. However, it fails to satisfactorily reduce the phase lag in lateral acceleration in a high frequency range because it is less effective in decreasing the delay in side force generation of the rear tires.

Shibahata et al. also proposed a more practical control method, called "HICAS," which detects the steering force of front tires and then controls the rear wheel steer angle in proportion to the force [11, 12]. This control method which uses steering force as input for rear steer angle control can be considered a feedback compensation system, which changes the characteristic root of steering responses.

Fig. 6 compares the feedback compensation 4WS system using the front tire side force as input with a feed-forward compensation 4WS system that uses steering wheel angle as input [13]. The thick solid line in the block diagram

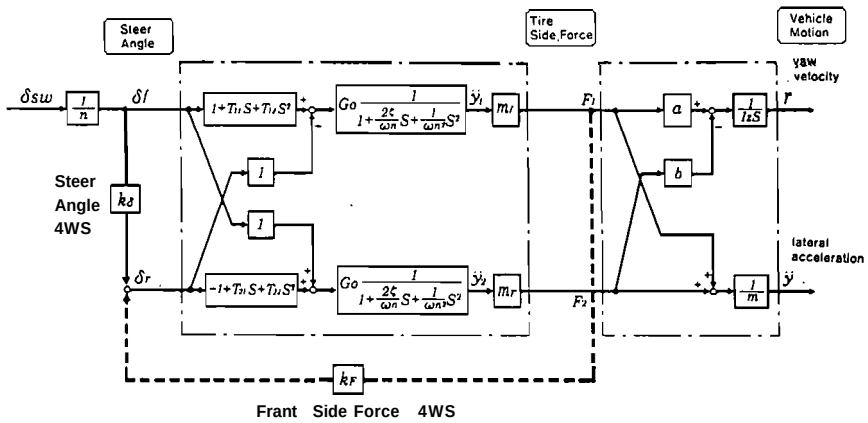

Fig. 6. Block diagram of steer-angle-input 4WS and front-tire-side-force 4WS.

indicates the former and the thick perforation shows the latter. In the feedback system, as shown in the diagram, the second-order lag in side force generation of the front tires causes a delay in rear wheel steering, and this impairs the effect in reducing the delay in side force generation of the rear wheels in a high frequency range.

(ii) Reduction of Body Sideslip Angle

As shown in equation (1), lateral acceleration consists of two components; one is the yaw rate, a state variable representing rotation, and the other is the sideslip angular velocity, a state variable representing translation. As vehicle speed increases, the lateral acceleration response delays more than the yaw response because the lead time constant for the sideslip angular velocity of the vehicle body decreases. This is mainly attributable to the fact that with a rise in vehicle speed, a steady-state gain in body sideslip angle declines, becoming negative in a highspeed range. From this observation, some studies are being made on a **4WS** control technique to bring the steady-state value of body sideslip angle as close to zero as possible [14, 15].

Given $B = \mathcal{L}[\beta]$, the response of body sideslip angle to front and rear steer angles can be written as:

$$B = G_\beta(0)\frac{1+T_\beta S}{1+\frac{2\zeta}{\omega_n}S+\frac{1}{\omega_n^2}S^2}\Delta_f + G'_\beta(0)\frac{1+T'_\beta S}{1+\frac{2\zeta}{\omega_n}S+\frac{1}{\omega_n^2}S^2}\Delta_r \tag{11}$$

where

$$G_\beta(0) = \frac{b - \frac{ma}{C_r\ell}U_0^2}{\ell(1+KU_0^2)},\quad G'_\beta(0) = \frac{a + \frac{mb}{C_f\ell}U_0^2}{\ell(1+KU_0^2)}$$

$$T_\beta = \frac{\frac{I_Z}{C_r \ell} U_0}{b - \frac{ma}{C_r \ell} U_0^2}, \qquad T_\beta' = \frac{\frac{I_Z}{C_r \ell} U_0}{b - \frac{ma}{C_r \ell} U_0^2}$$

In the feed-forward control system described in (i) above which steers the rear wheels at the steer angle ratio k to the front wheels, a response in sideslip angle to the steering wheel angle comes to:

$$\pounds\,[\beta/\delta sw] = \frac{1}{n} \frac{G_\beta(0) + kG_\beta'(0) + \{G_\beta(0)\,T_\beta + kG_\beta'(0)\,T_\beta'\}\,S}{1 + \frac{2\zeta}{\omega_n} S + \frac{1}{\omega_n^2} S^2} \tag{12}$$

and a steady-state gain in body sideslip angle is:

$$\pounds\,[\beta/\delta sw]_{SS} = \frac{1}{n}\,\{G_\beta(0) + kG_\beta'(0)\}$$

$$= \frac{1}{n} \frac{\left(b - \frac{ma}{C_r \ell} U_0^2\right) + k\left(a + \frac{mb}{C_r \ell} U_0^2\right)}{\ell\,(1 + KU_0^2)} \tag{13}$$

Given $\pounds\,[\beta/\delta sw]_{SS} = 0$, the ratio k can be solved as follows:

$$k = \frac{-b - \frac{ma}{C_r \ell} U_0^2}{a + \frac{mb}{C_f \ell} U_0^2} \tag{14}$$

If the rear-to-front steer angle ratio k is set properly in accordance with equation (14) depending on vehicle speed U_0, therefore, the steady-state value of body sideslip angle can be kept at zero over a full range of vehicle speed.

A 4WS control system that can thus vary the rear-to-front steer angle ratio according to vehicle speed is known as the "vehicle-speed-sensing 4WS." Takiguchi et al. proposed a vehicle-speed-sensing 4WS system designed to control the rear-to-front steer angle ratio in such a manner that phase lags in yaw rate and lateral acceleration ranging from 0.5 Hz to 1 Hz would be kept roughly equal [15].

Equation (14) is intended to determine the rear-to-front steer angle ratio k in such a manner, disregarding the term S in equation (12), that the body sideslip angle in a steady-state response will be always kept at zero. It should be noted, therefore, that in a transient state, the body sideslip angle may not necessarily be zero. Takeuchi et al. extended equation (14) to cover a transient state and set the body sideslip angle at zero in all states, including the term S in the numerator of

equation (12) [16]. With this extended expression, they made a theoretical pursuit to keep the body sideslip angle always at zero in transient state as well by dynamically controlling the rear wheel steer angle as in the following equation:

$$\Delta_r = \frac{-b - \frac{ma}{C_r \ell} U_0^2 - \frac{I_z}{Cr\ell} U_0 S}{a + \frac{mb}{C_f \ell} U_0^2 + \frac{I_z}{C_f \ell} U_0 S} \Delta_f \tag{15}$$

Fukui et al. proposed another control principle for the rear wheels based on the following idea [17]:

(a) When the steering wheel was turned quickly, the rear wheels would be steered in the opposite direction to the front ones to make the vehicle steer more sharply; and

(b) When the steering wheel was turned slowly, on the other hand, the rear wheels would be steered in the same direction as the front ones to achieve greater stability in vehicle motion.

Their control principle can be written as:

$$\Delta_r(S) = \left(K_\delta - \frac{KS}{TS+1}\right) \Delta_f(S) \tag{16}$$

Reduction of this equation reveals that it consists of the same transfer functions as equation (15).

Then they conducted a series of closed-loop tests on a drum-type simulator equipped with a visual system to verify the control effects of equation (16). The findings indicate that in making a lane change, a 4WS car using a control system based on this equation can move sideways faster than the conventional 2WS car, while in the subsequent straight driving, it tends to make less fishtailing than the latter. If it is exposed to a short-duration, stepped external disturbance during straight-road driving, the test report says, the driver can quickly settle the vehicle motion to a steady state with less correction steering. This makes the driver feel external disturbances less intense and enables him to drive more stably.

Then Hayashi et al. worked out the 4WS control principle in five different strategies which would control the rear-wheel steer angle by front-to-rear-proportional control, yaw rate feedback control, phase lag control, lead/lag control, and a combination of lead/lag and yaw rate feedback controls, respectively [18]. With the characteristic roots of closed-loop systems, they analyzed differences in the effectiveness of these five control strategies. They calculated the characteristic roots of the closed-loop systems using mathematical models of drivers' steering responses. Taking note of the two characteristic roots which respectively governed the first and second stages of vehicle's restoring behavior from an external disturbance, they analyzed these characteristic roots and conducted the closed-loop tests on the simulator. They reported

Control system \ Functions		
(A) Front wheel steering (——)		
(B) Proportional (----)		K_r
(C) 1st-order delay (---)	0	$K_r/(1+T_r \cdot S)$
(D) 1st-order advance (—·—)	0	$K_r - T_r \cdot S$
(E) Front and rear wheel (-··-)	$K_f + T_f \cdot S$	$K_r - T_r \cdot S$

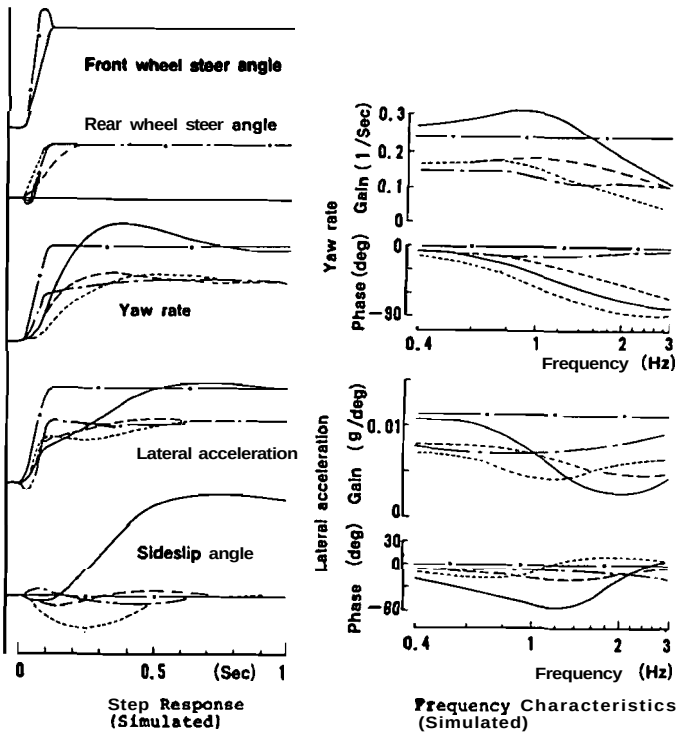

Fig. 7. Effect of phase lead and phase lag compensation on steering response.

that proper selection of 4WS control methods improved both the response and stability of a driver-vehicle system, since it enabled to assign the two characteristic roots at desired location.

Meanwhile Fukunaga et al. proposed a front and rear wheel control principle [19, 20] that combined the dynamic control method for rear wheel steer angles described above with a phase lead compensation technique proposed by Hirao [1] for front-wheel steer angle. They reported phase lags in both yaw rate and lateral acceleration responses to steering could be theoretically brought to zero, as shown in Fig. 7, by their front and rear steer angle control principle which could be written as:

$$\left.\begin{aligned}\Delta_f &= \frac{1}{n}\{1 + Kop + (C_r/C_f)\,Top\,S\}\,\Delta sw \\ \Delta_r &= \frac{1}{n}(Kop - Top\,S)\,\Delta sw\end{aligned}\right\} \tag{17}$$

where

$$Kop = \frac{a\,m\,C_f U_0^2 - b\,\ell\,C_f C_r}{\ell^2 C_f C_r + (C_r b - C_f a)\,m\,U_0^2}\left(= \frac{-b + T_r U_0}{\ell\,(1 + K U_0^2)}\right)$$

$$Top = \frac{C_f I_Z U_0}{\ell^2 C_f C_r + (C_r b - C_f a)\,m\,U_0^2}\left(= \frac{T_2 U_0}{\ell\,(1 + K U_0^2)}\right)$$

The relationship between **Af** and **A** r derived from equation ***(17)***coincides with equation (15). In other words, the front and rear steer angle control principle described in equation **(17)**, if considered in terms of transfer function for the rear wheels to the front ones, is fully consistent with the control principle proposed by Takeuchi et al.

With a four-wheel model covering the influence of the suspension system's kinematic effects and lateral weight transfer on tire characteristics, Nalecz and Bindemann analyzed the effectiveness of the various types of feed-forward compensation 4WS control principles described above based on computer simulations [21, 22]. They examined vehicle behavior during stepped steering and simultaneous application of steering and braking. The study verified the finding of previous research activities that the 4WS system could make the vehicle more responsive to the driver's steering and reduce or eliminate such undesirable motions of the vehicle body as sideslips and fishtailing.

Sato et al. proposed another system [23]. During extremely low speed driving, the system would steer the rear wheels in the opposite direction to the front wheels at a ratio of one to one, but as the vehicle speed increases, it would compensate for a body sideslip angle by giving additional steer to the rear wheels through yaw rate feedback so as to reduce the off-tracking of the vehicle to zero. This control principle can be written as:

$$\delta_r = -C_f \delta_f + C_2 U_0 r \tag{18}$$

where

$$C_f = 1.0,\ C_2 = \frac{mb}{C_f \ell} + \frac{ma}{C_r \ell}$$

The method of thus controlling the rear wheel steer angle by feeding back variables respresenting such vehicle motions as yaw rate can change the characteristic roots of the vehicle lateral dynamics, leading to the enhancement of vehicle stability. With a computer simulation, Sato et al. identified the behavior of the vehicle when receiving an external disturbance from a side wind,

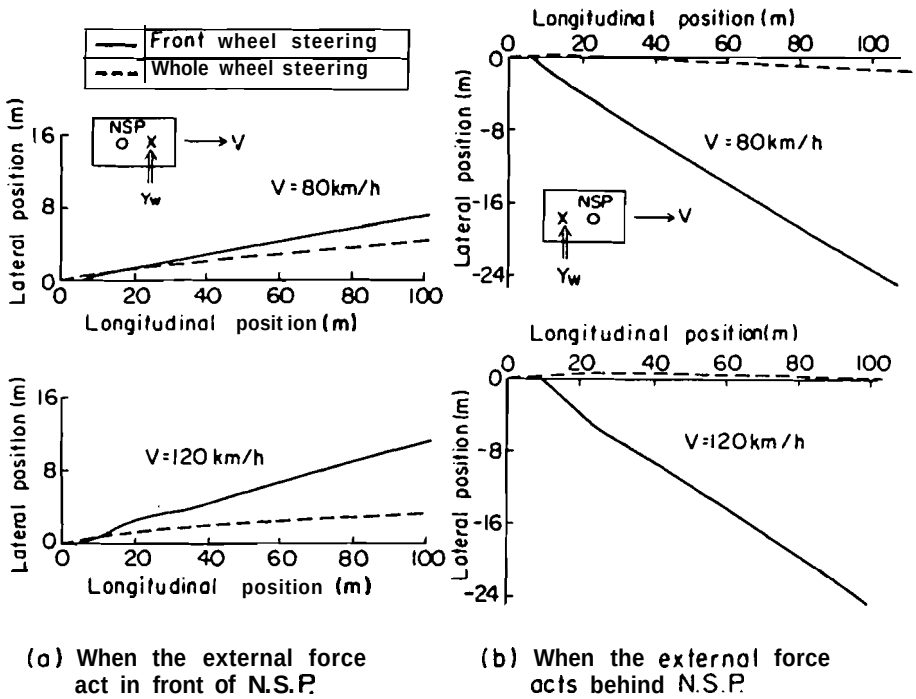

Fig. 8. Trajectory of yaw velocity feedback 4WS vehicle for external disturbance.

and as shown in Fig. 8, they proved that even when the steering wheel angle was fixed, a feedback compensation 4WS system was subject to a smaller lateral displacement than the 2WS system.

The next section discusses the dynamics of the feedback compensation 4WS system described above.

(iii) Stability Augmentation

Fig. 3 shows a 4WS system that controls the rear wheel steer angle by feeding back vehicle motions. The simplest form of this 4WS control system is the one which feeds back only yaw rate as in the following equation:

$$\delta_r = Pr \tag{19}$$

Let us take it up as an example here to dynamically study the control effects of this type of 4WS system. From equation (6), yaw and lateral acceleration responses to steering can be respectively written as:

$$R = \frac{1}{n} \cdot \frac{G_r(0)}{1 + PG_r(0)} \cdot \frac{1 + T_r S}{1 + \frac{\frac{2\zeta}{\omega_n} + PG_r(0)\, T_r'}{1 + PG_r(0)} S + \frac{1}{(1 + PG_r(0))\,\omega_n^2} S^2} Asw \tag{20}$$

$$S^2 Y = \frac{1}{n} \cdot \frac{G_{\ddot{y}}(0)}{1 + P G_r(0)} \cdot \frac{1 + (T_1 + P) S + T_2 S^2}{1 + \dfrac{\dfrac{2\zeta}{\omega_n} + P G_r(0) T_r'}{1 + P G_r(0)} S + \dfrac{1}{(1 + P G_r(0)) \omega_n^2} S^2} \, \delta_{SW} \tag{21}$$

In this type of 4WS which controls the rear-wheel steer angle by feeding back state variables, specifically yaw rate, as indicated in equations (21), the characteristic equation of the system is subject to change, resulting in different open-loop characteristics of the vehicle. With the feedback constant Pgiven as a positive number, the characteristic root shifts toward the negative direction of the real axis making the open-loop characteristics of the vehicle more stable.

Okada and Takagi were the first group that made a theoretical analysis of a 4WS system having the feedback compensation described above [24]. They proposed a 4WS system that would control the rearwheel steer angle by feeding back the sideslip angle of the rear tires and also add the rear steer angle to the front one. With a mathematical model, they proved the 4WS system was subject to a smaller body sideslip angle and had better steering response and greater stability, compared with the 2WS system.

Meanwhile Iguchi found from a theoretical study that the transfer function of vehicle steering response at any speed could be shifted from the second-order lag system to the first-order lag system by controlling the front and rear steer angles with a combination of dynamic feed-forward compensation and feedback compensation for yaw rate and front and rear tire side forces [25].

Another proposal was made by Leucht who argued that Kalman filter should be used to estimate state variables in the equations of vehicle motion for feedback compensation purposes [26].

The foregoing paragraphs have described the effects of controlling the rear wheel steer angle by feedback compensation. As discussed in Section 2, however, the characteristic roots of yaw and lateral acceleration responses to rear wheel steering are identical with those for front wheel steering. Accordingly feedback compensation, if used for controlling the frontwheel steer angle, brings about exactly the same effect as when used for controlling the rear wheel steer angle. In this context, it may be argued that feedback compensation does not necessarily have to be made at the rear wheels.

(iv) Improvement of Vehicle Maneuverability at Low Speed

A 4WS system designed to steer the rear wheels in opposite direction to the front ones in order to offer better vehicle maneuverability at low speed was made commercially available many years ago for some special purpose vehicles. This control technique, which steers the front and rear wheels always in opposite directions, is not suitable for high speed driving because it involves a greater phase lag in lateral acceleration response. It can be maintained, therefore, that a primary consideration in research activities in this area should be how to make improvements in both vehicle maneuverability at low speed and handling

quality at high speed. Some control methods have been proposed in an effort to achieve this end.

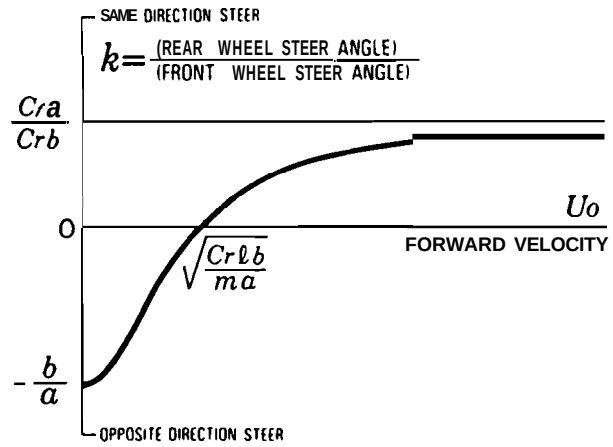

Fig. 9. Speed sensing 4WS.

Among them is the gain schedule control system described in equation **(14)** which varies the rear-to-front steer angle ratio k depending on vehicle speed U_0. During very low speed driving ($U_0 \fallingdotseq 0$), as shown in Fig. 9, this control system steers the rear wheels in the opposite direction to the front ones ($k < 0$) at the maximum steer angle ratio, while at high speed, it steers the rear wheels in the same direction as the front ones ($k > 0$) [27]. The minimum turning radius and off-tracking, two major performance parameters governing vehicle maneuverability at very low speed, depend on the maximum steer angle of the rear wheels. Based on U-turn and parkability tests on a two-liter passenger car with **15** drivers, Takiguchi et al. reported that the maximum steer angle of the rear wheels best-compromized for the system in improving low-speed maneuverability was around **5** degrees [15]

Another control system for reconciling improvements in low speed maneuverability and high speed handling qualities is a steer angle dependent **4WS** proposed by Sano et al. [14, 28]. As shown in Fig. **10,** this **4WS** system varies the rear-to-front steer angle ratio depending on the steering wheel angle. More specifically, when the driver turns the steering wheel in a small angle, the rear wheels are steered in the same direction as the front ones, but when he turns it in a large angle, the rear wheels are steered in the opposite direction to the front ones. During a high speed cruise, the driver does not turn the steering wheel in a very large angle and so the system steers the rear wheels in the same direction as the front ones, but when sharp cornering has to be made at low speed, the rear wheels are steered in the opposite direction to the front ones because the driver turns the steering wheel in a large angle. Making the most of the relationship between vehicle speeds and the steering angle range, this system achieves

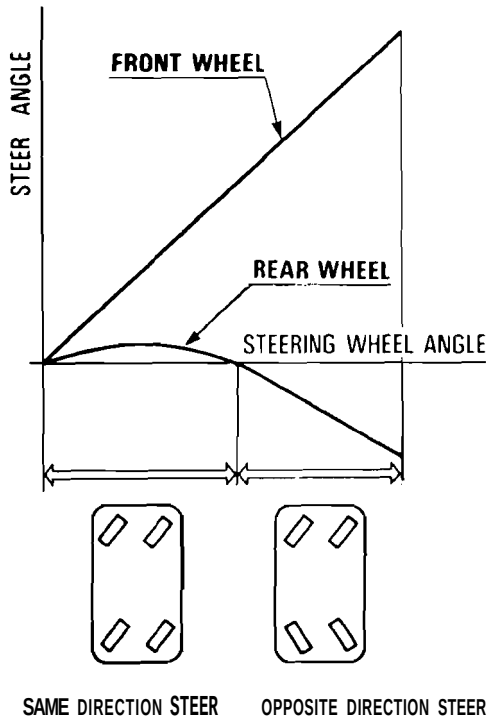

Fig. 10. Steer angle dependent 4WS.

significant improvements in both low speed maneuverability and high speed handling quality without sensing of vehicle speed.

Sano et al. conducted a series of closed-loop tests on an experimental 4WS car which could vary the lateral acceleration and yaw responses independently of each other by changing the combination of rear-to-front steer angle ratio and tire cornering stiffness [7]. From these tests, they found that during roughly straight driving like a lane change, the driver's control performance largely depended on the lateral acceleration response of the vehicle, whereas during large amplitudecourse tracking, it largely depended on the yaw response. In this context, the steer angle dependent 4WS can be considered a gain schedule control system that varies the steering response characteristics according to the turning radius; during roughly straight driving, it reduces the phase lag in lateral acceleration response, and during cornering, it offers a quick yaw response in addition [13].

These steerangle-dependent and vehicle-speed-sensing 4WS systems are often chosen these days by many researchers as their subject of study partly because both systems have already been technically completed and installed in some production passenger oars now on the market.

Based on a linear analysis, Bernard et al. pointed out that the understeer

gradient of the feed-forward compensation 4WS car, although not essentially different from the conventional definition, was more difficult to measure because of the effects of rear wheel steering [29]. With this in mind, they proposed some methods of finding the understeer gradient of the 4WS car. They report that a cornering test with a given turning radius provides a proper means of finding the understeer gradient of a vehicle-speed-sensing 4WS system designed in accordance with equation (14). As is apparent from the steady-state gain in equation (8), the front-wheel steer angle relative to lateral acceleration comes to $1/(1 - k)$ times that of the 2WS system in such a cornering test. Meanwhile a suitable way to find the understeer gradient of the steer-angle-dependent 4WS system is a cornering test with a given steering angle where the value of ℓ/R (the wheelbase/the turning radius) relative to lateral acceleration becomes smaller than that of the 2WS system $k\delta f$. Based on an analytical study, their report also states that the 4WS car which does not vary the rear-to-front steer angle ratio depending on vehicle speed has the same characteristic speed as the conventional 2WS car, while the vehicle-speed-sensing 4WS car built in accordance with equation (14) has much lower characteristic speed than the 2WS car. In critical speed, neither of the 4WS cars differs from the 2WS car. In yaw rate response time, the proportional control 4WS car with a neutral steer character does not differ from the 2WS car, but when it is given an understeer character, the 4WS car has longer response time than the 2WS car, and when an oversteer character is given to it, the 4WS car has shorter response time.

As noted earlier in this report, Sato et al. proposed a yaw rate feedback compensation 4WS system based on equation (18). This system can also improve both vehicle maneuverability at low speed and handling quality at high speed. To cope with the extreme understeer character of the 4WS system worked out by Sato et al., Senger proposed that this 4WS should be combined with another system which would vary the front wheel gear ratio depending on vehicle speed [30].

Meanwhile Whitehead contends that during parallel parking at low speed, vehicle maneuverability does not improve appreciably whether the rear wheels are steered in the same direction as or in the opposite direction to the front wheels. [3]. Shibahata et al. also report that steering the rear wheels at a large angle in the opposite direction to the front ones is not very effective in improving low speed maneuverability because it makes the rear end of the vehicle stick out further toward the outside of the curve [31].

To keep down the outward protrusion of the vehicle tail due to the steering of the front and rear wheels in opposite directions at low speed, Hata et al. set a control target for the rear end of the vehicle so that it would follow the trajectory of the front end [32]. Then they derived a control algorithm for the rear wheels steer angle from a geometric relationship and conducted simulation and proving-ground tests to verify the effects of the remedy described above.

It should be noted here that these studies simply dealt with vehicle motions with the steering wheel fixed at the lock at either end. In reality, however, the

driver steers the vehicle properly depending on its position or attitude, and therefore, we have yet to examine this dynamic behavior before we can draw a reasonable conclusion.

(v) Achievement of Desired Steering Response (Model Matching/Following Control)

Studies are being made on the application of model-following control methods to the 4WS system to match the steering response characteristics of yaw rate and lateral acceleration to a desired reference model.

Ito et al. contend that from a practical viewpoint, the feedback compensation 4WS system is not yet fully reliable because some problems still remain uncleared, specifically the system stability during an appreciable change in vehicle response characteristics and interference between the driver's operation and the control system. For this reason, they proposed **a** model-following control method with only feed-forward compensation as an effective means of providing a better 4WS control system [4, 33, 34]. They introduced the quantity D* which was defined by a linear combination of yaw rate and lateral

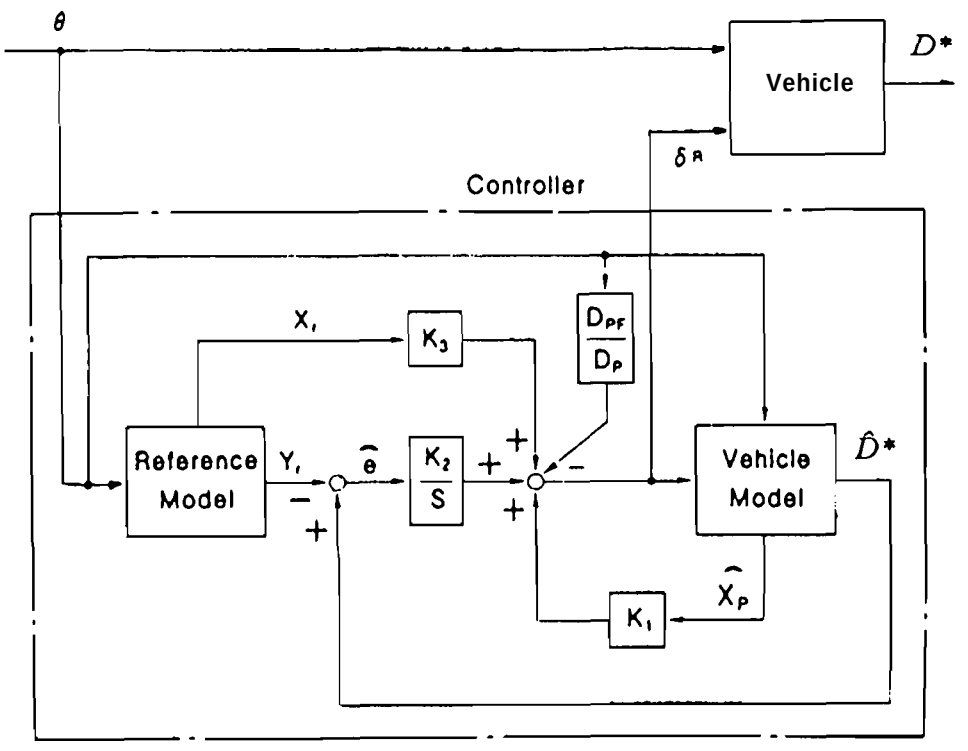

Fig. 11. D*-model following control system

acceleration. Then the group worked out a control system for the rear wheel steer angle that could make the quantity D* follow the output of a desired reference model as shown in Fig. 11. This was followed by further research efforts to verify the effects of the new control system by mathematical models and a series of tests on an experimental vehicle. Based on the test findings, they reported that the 4WS control method could achieve the desired yaw rate or lateral acceleration response and offer greater stability when steering effort was given as input and the driver kept his hands off the steering wheel.

Meanwhile Nagai and Ohki proposed another control system which would control the front and rear wheels by a combination of feedback and feed-forward compensation to make the steering response characteristics of vehicle sideslip angle and yaw rate follow a virtual vehicle model [35]. They made a theoretical analysis of a closed-loop system, including the driver, and compared two control system configurations, one with only feed-forward compensation loop and the other with both feedforward and feedback compensation loop. They reported that the addition of feedback compensation to the control system capabilities ensures greater stability in straight-road driving because the vehicle can respond autonomously to reduce external disturbance effects from a side wind. They also analyzed the effects of errors in vehicle modelling and of changes in parameters for the vehicle or the driver [36].

Among various control strategies for the 4WS system having a combination of feed-forward and feedback compensation loops, Nametz et al. proposed a control principle that would make feedback compensation for a difference between the real and desired yaw rates using a PID control [37]. With a computer simulation, they verified the effects of this control method in increasing the vehicle stability against an external disturbance from a side wind.

(vi) Maintenance of Desired Steering Response Characteristics againgst Changes in Vehicle Parameters (Adaptive Control)

Many of the 4WS discussed above adopt the gain schedule control system which varies control parameters to compensate for changes in vehicle speed or turning radius. Apparently this system is very useful as it is comprised of a relatively simple control algorithm and yet very effective. But to always achieve the desired steering response characteristics exactly against changes in the state of the vehicle itself, such as its loading and tire air pressure, changes in road and other environmental conditions, or errors due to the nonlinear factors and/or higher degrees of freedom which are not covered by the equations of vehicle motion we have to develop another control method that can properly adjust control system parameters autonomously in response to changes in these states or conditions. This method is called "adaptive control".

Matsushita et al. proposed the system configuration and design method for a steering system that would always realize the desired yaw rate characteristics using adaptive control for the front wheels of the 2WS system no matter what the vehicle speed, weight, the position of its center of gravity and the condition

of the road surface may be [38]. This steering system uses the design theory of a Self Turning Controller with a pole-zero assignment that can directly specify vehicle controllability and stability. They described a mathematical model of vehicle yaw rate by a discrete-type linear stochastic equation which contained a stochastic noise expressed by AR process. Then parameters in this equation were identified on real time by a recursive extended least mean square method that included forgetting factors proposed by Fortescue. Based on the findings of a proving-ground test on an experimental vehicle equipped with this system, they reported that regardless of changes in vehicle characteristics, the system could achieve the desired yaw rate response specified by a reference model.

In addition, Yuhara and some other researchers have applied this adaptive control system to the rear wheels of a **4WS** system and are now conducting a series of proving-ground tests on an experimental vehicle equipped with such a steering system to verify the effects of the adaptive control system.

Meanwhile Kanai et al. applied the design theory of a model reference adaptive control system to the **4WS** and proposed a design method for a system that would adaptively control yaw rate, lateral acceleration and their combined quantity D^* [39]. Based on a hybrid method using measured values of yaw rate, vehicle speed and steering angle, they tried to identify uncertain parameters in a linear model with two degrees of freedom. The parameter identification was then verified by a proving ground test on an experimental vehicle and the system effects were also proved by a computer simulation.

(vii) Improvement of Steering Response Near the Limits of Tire Adhension

As lateral acceleration increases during cornering, the frictional force between the tire treads and the road surface gets saturated, resulting in decreasing tire cornering stiffness. Therefore the vehicle makes different steering responses during straight driving and cornering.

Sano et al. analyzed the steering responses of the **2WS** and **4WS** cars when their steering wheels were turned additionally in a small angle during cornering with lateral acceleration above a certain level [13]. Through this analytical study, they examined the control effects of a steer angle dependent **4WS** system that was made to steer the rear wheels with a nonlinear function against the front wheels. They reported that as shown in Fig. 12 and 13, a nonlinear **4WS** system designed to lower the rear-to-front steer angle ratio against an increase in steering wheel angle could maintain a yaw rate gain above a certain level up to a higher range of lateral acceleration than the **2WS** or a linear **4WS** system with a constant rear-to-front steer angle ratio.

Meanwhile Abe succeeded in finding equivalent cornering stiffness throug analytical solution of vehicle motions involving significant lateral acceleratio as in cornering or substantial longitudinal acceleration, specifically changes i.. side force characteristics due to the traction or braking forces or changes in their vertical load of the front and rear tires [40]. Then he proposed a control principle for front and rear wheel steer angle which, even under the conditions

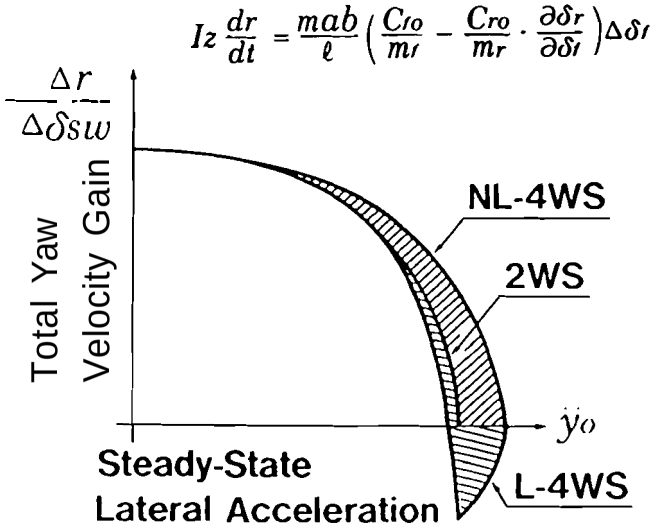

Fig. 12. Effect of non-linear control.

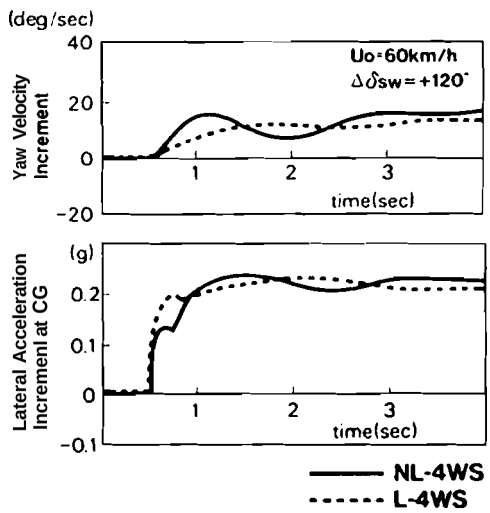

Fig. 13. Rampstep response to additional 120° turn of steering wheel during steady-state-cornering at 0.6 g

ncted above, coul orffer vehicle characteristics as close as possible to the desirable steering r ;pconses set forstraight, constant-speed diriving. As shown in Fig. 14, the effec of this controlprinciple were verified by a simulation using a nonilinear vehicle iotiom model with multiple degrees of freedlcm.

Baeed on the ide olf controlling thei mner and outer whee lsoft he v hicle i dependentl of each other durim cornerin Lugner et al. ndt hrough an

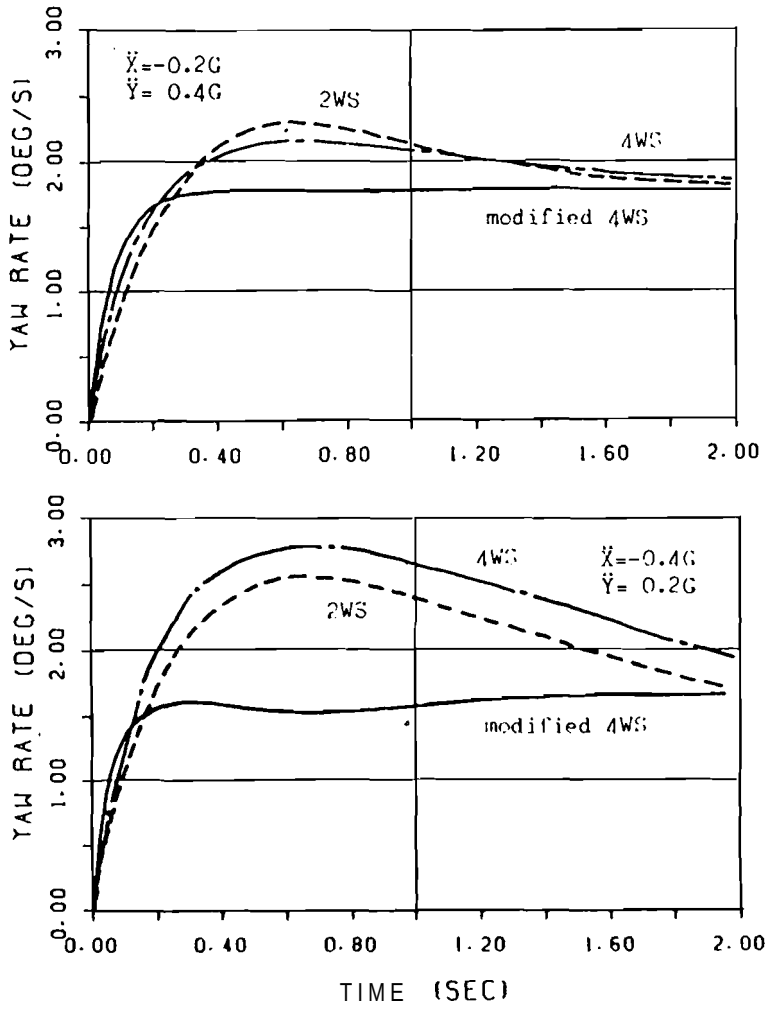

Fig. 14. Rampstep steering response with braking maneuver.

analytical study that the deviation of the vehicle from the desired path during cornering on a μ-split road could be reduced by controlling the right and left wheels in opposite directions [41].

4. COMMERCIAL 4WS TECHNOLOGIES

(1) Honda

The Honda **4WS** is a feed-forward control system that steers the rear wheels directly by steering wheel angle, varying the rear-to-front steer angle ratio as a function of the steering wheel angle as indicated in Fig. 15 [28].

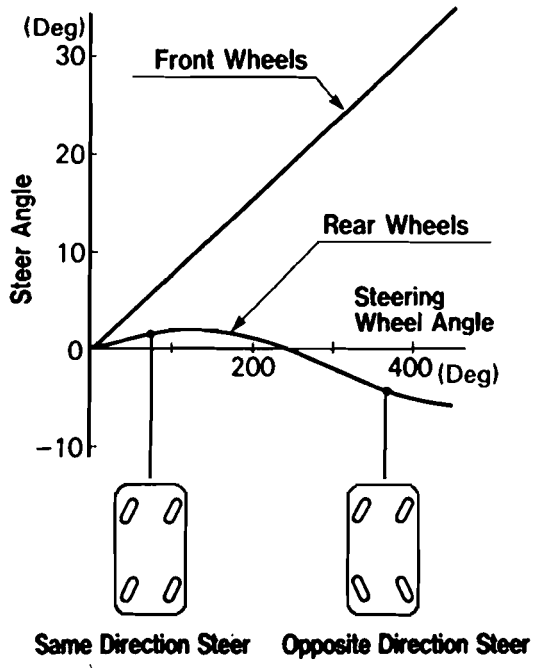

Fig. 15. Steering characteristics of Honda Steer Angle Dependent 4WS

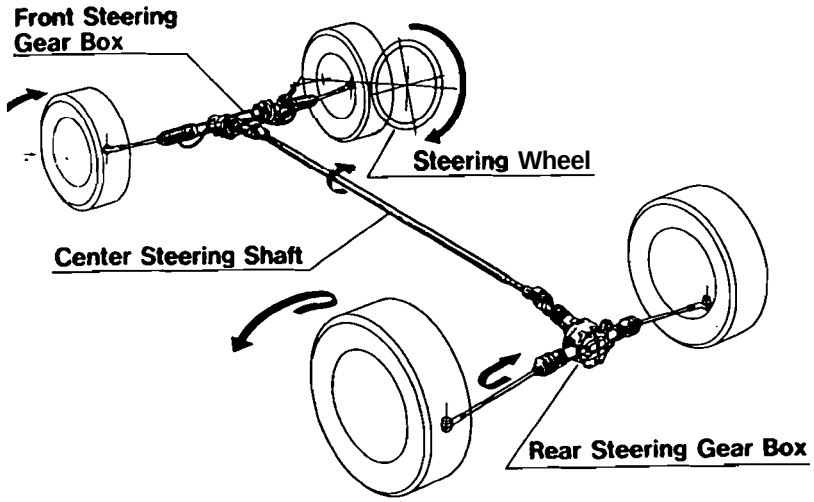

Fig. 16. System construction of Honda 4WS.

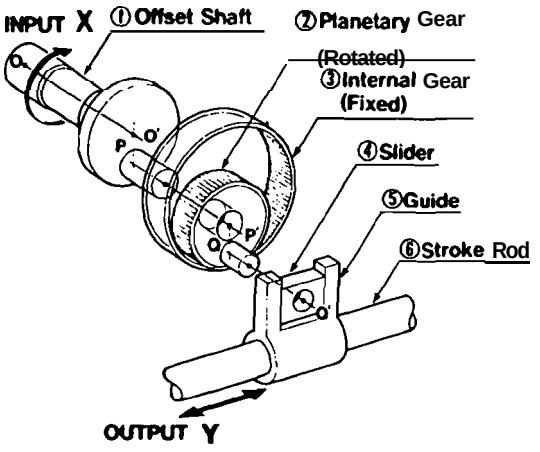

Fig. 17. Basic mechanism of rear steering gearbox.

The steering gearbox for the front and rear wheels are directly linked by a shaft as shown in Fig. 16 [28], and the rotation of the shaft transmitted from front wheel steering is reversed by the planetary gear in the rear steering gearbox described in Fig. 17 [2] so that when the steering wheel is around the neutral position, the rear wheels are steered in the same direction, while in the larger steering angle range, they are steered in the opposite direction. This gives the **4WS** system similar steady-state gain to a variable ratio steering system. In other words, its steering response gain is kept low during roughly straight driving, but as the cornering radius becomes shorter, this gain grows larger. Fig. 18 [28] shows the equivalent steering gear ratio of the Honda **4WS** system.

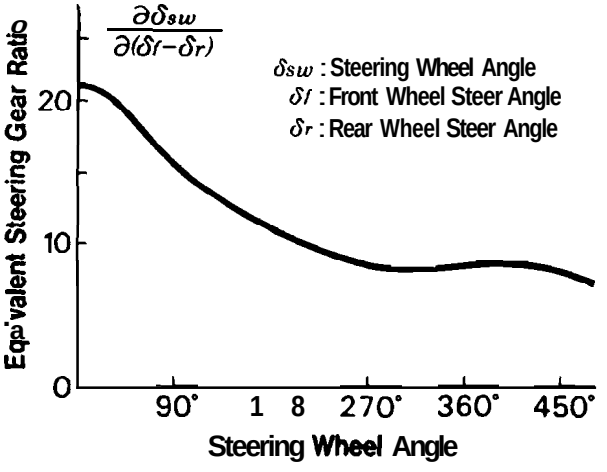

Fig. 18. Equivalent steering gear ratio of Honda 4WS.

Another major feature of this 4WS system, in which the rear wheel steer angle entirely depends on a function of the steering wheel angle, is that changes in steering response characteristics according to vehicle speed are not affected by rear wheel steering.

(2) Mazda

The Mazda 4WS is also a feed-forward system that steers the rear wheels by steeringwheel angle like the Honda 4WS, but as shown in Fig. 19 [42], it uses a vehicle-speed-sensing system which varies the rear-to-front steer angle ratio depending on vehicle speed.

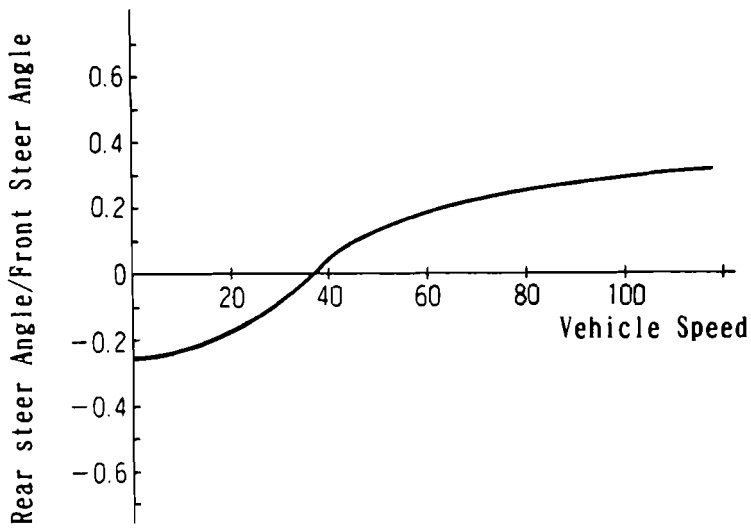

Fig. 19. Steering characteristics of Mazda vehicle speed sensing 4WS.

Fig. 20 [15] describes the system construction of the Mazda 4WS. Rotary motion from the front gearbox is transmitted to the rear gearbox by a shaft but it is not directly linked with the rear-wheel steering subsystem. Instead this motion is used to work the servovalve which controls hydraulic pressure from an engine-driven oil pump specifically installed for the rear wheel steering subsystem. With an increase in vehicle speed, as shown in Fig. 21 [15], the rear-to-front steer angle ratio shifts from a negative phase to a positive one through changes in the turning range of the control yoke which regulates the relationship between the turning angle of the shaft and servovalve movement. The operating range of the control yoke is adjusted by a motor which works according to information on vehicle speed.

Since this system uses a hydraulic unit for rear-wheel positioning, a spring is installed in the cylinder to return the rear wheels to the neutral position during a

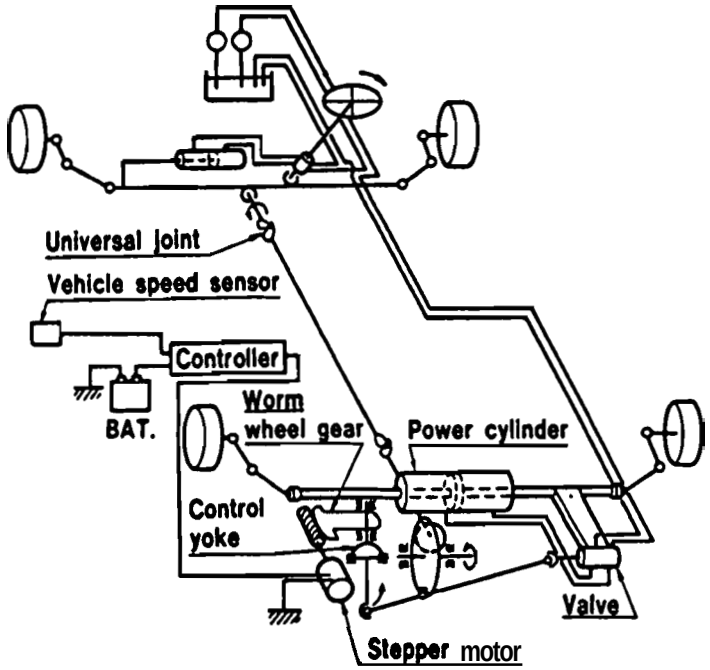

Fig. 20. Mazda "SS 4WS" system.

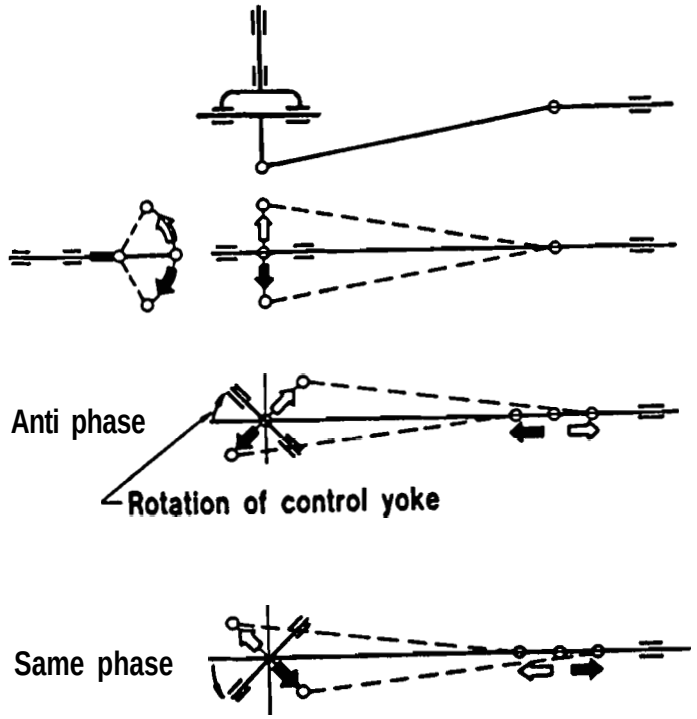

Fig. 21. Functional logic of control yoke.

hydraulic system failure. If any trouble occurs with the electric system, the rear wheels are returned to neutral by a solenoid valve which reduces hydraulic pressure from the pump to zero.

(3) Nissan

Nissan HICAS uses a feedback control method which steers the rear wheels by a function of front wheel aligning torque and, as shown in Fig. 22 [11], sets the maximum rear steer angle as a function of vehicle speed.

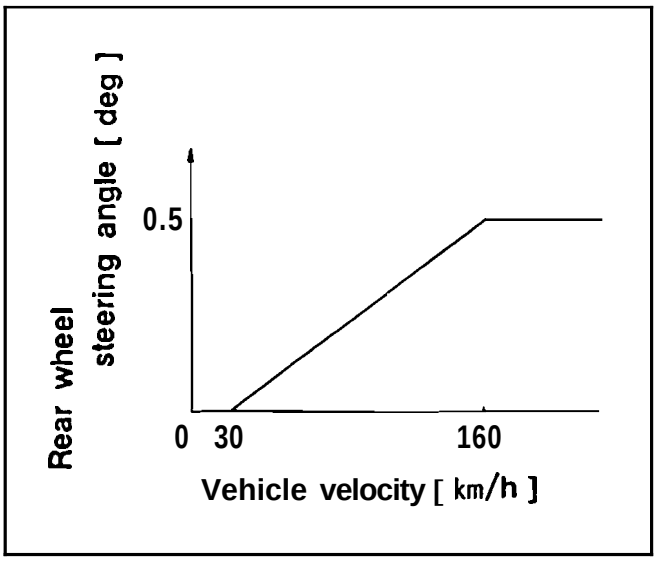

Fig. 22. Steering characteristic of Nissan "HICAS"

The system has no special gearbox to steer the rear wheels. As shown in Fig. 23 [12], the whole rear suspension is rotated by a small hydraulic cylinder installed on either side which pushes or pulls the end of the suspension mount beam when steering the rear wheels. Because of this system construction, the rear wheels can be steered only up to 0.5 degrees and always in the positive phase, i.e., in the same direction as the front wheels. To supply hydraulic power for steering the rear wheels, the system uses a combination of an engine-driven hydraulic pump specially installed for the rear steering subsystem, a sensor unit for detecting the reaction force of front wheel torque from the steering shaft, and a servovalve. In addition, an electrically-controlled by-pass valve is operated according to vehicle speed to determine the final steer angle for the rear wheels.

As a precaution against a hydraulic failure, the system is designed to return the rear wheels to neutral during such trouble by the restitutive force of the suspension mount rubber.

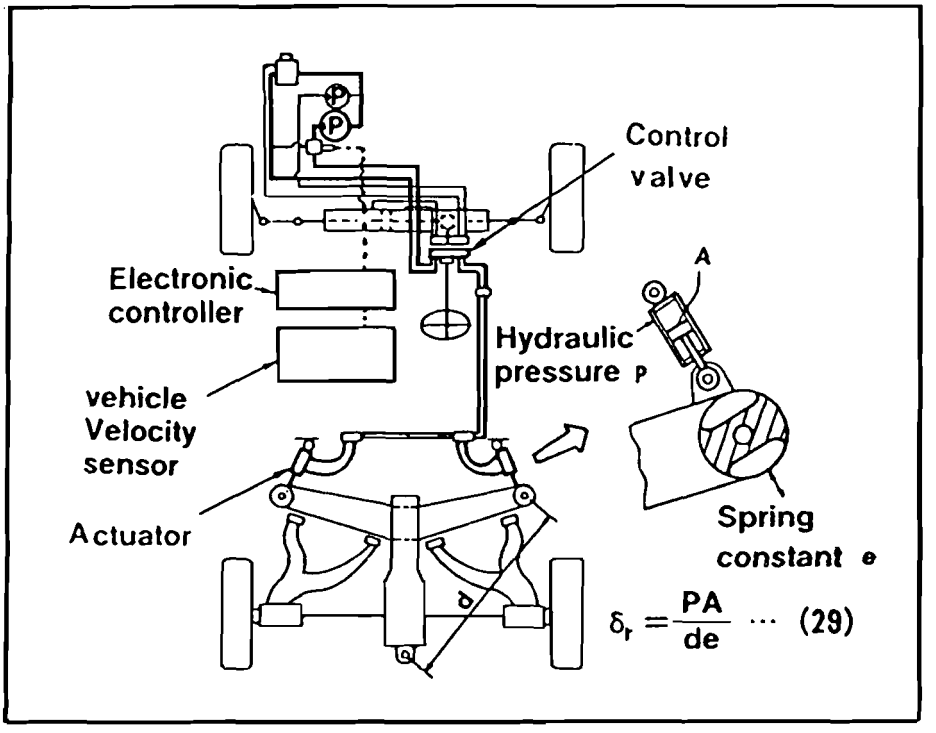

Fig. 23. Nissan "HICAS"

Recently Nissan has launched another **4WS** system which has a hydraulic cylinder for directly steering the rear wheels to increase the available rear steer angle. As in the Mazda 4WS, the hydraulic cylinder of this new system has a built-in spring to automatically return the rear wheels to neutral if a hydraulic system failure occurs.

(4) Mitsubishi

Mitsubishi also uses a feedback control technique for its **4WS** system which, like Nissan's, steers the rear wheels by a function of front wheel aligning torque.

As described in Fig. 24 [43] the rear wheels are steered by bending a part of the rear trailing link near the pivot with a hydraulic cylinder specially installed for this purpose. Due to this system construction, the rear wheels can be steered only in a small angle and in the positive phase. A major feature of the Mitsubishi **4WS** system is that hydraulic power for steering the rear wheels is supplied from a rear-axle-driven hydraulic pump to the cylinder through a servovalve which is controlled by the power steering hydraulic system for the front wheels. This mechanism translates changes in vehicle speed into those in hydraulic pressure,

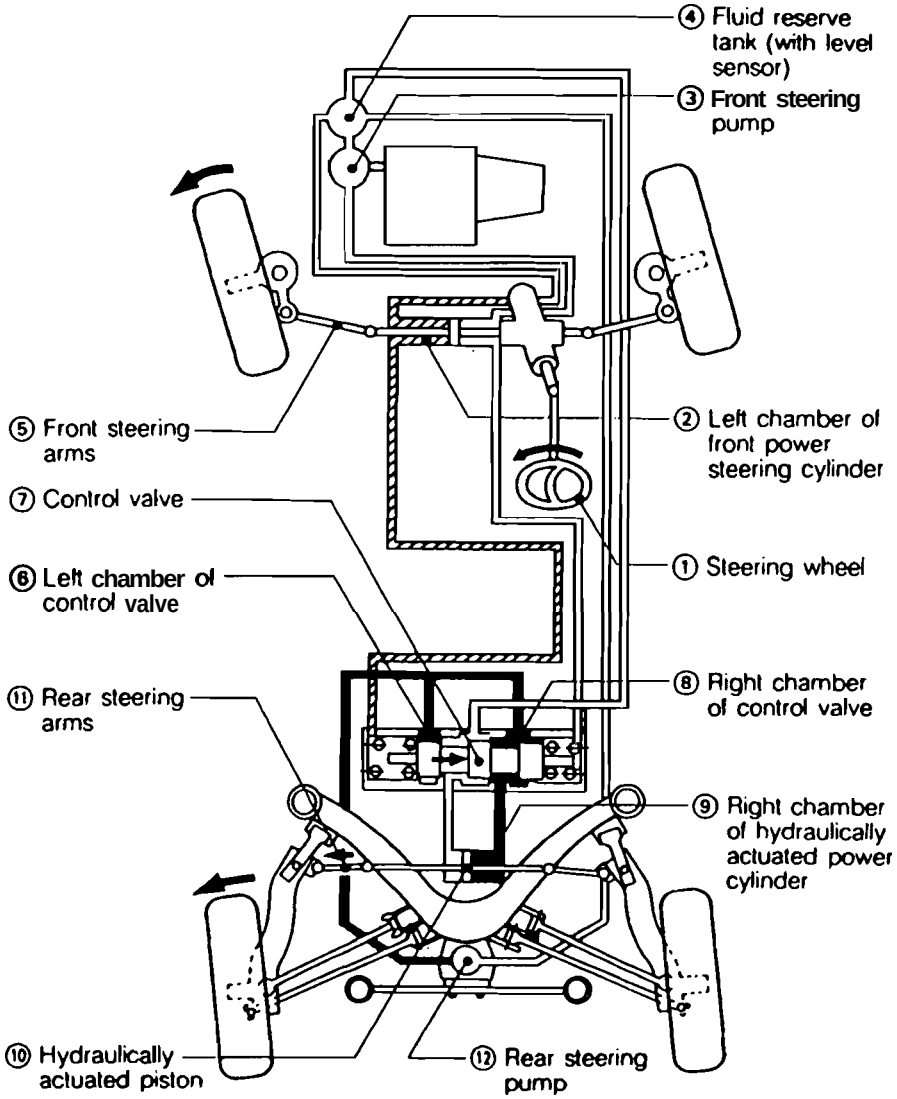

Fig. 24. Construction and operation of Mitsubishi 4WS system.

which are added to the determinant of rear wheel steer angle. Another feature is that the system, entirely consisting of hydraulic circuits, uses no electric power. It has fail-safe capability which automatically returns the rear wheels to neutral in the event of any trouble with the front power steering system and/or the rear hydraulic pump.

5. CONCLUSION

As is obvious from the foregoing discussions, steady progress has been achieved over the last 10 years in 4WS technology which is now being studied in many countries of the world from various angles. Some basic control systems of this technology have already been installed in production passenger cars by four major automobile manufacturers in Japan.

The 4WS technology can be broadly divided into two categories, a feed-forward compensation that uses the driver's steering-wheel angle as system input and a feedback compensation which uses the state variables of vehicle motion as input. Research projects are now under way to find how to control front and rear steer angles more dynamically by a control system using these compensation strategies individually or in combination. These days, energetic research activities are being made on the 4WS technology as a suitable example of practical application of modern control theories, including the model-matching or model-following control techniques to achieve desired steering response characteristics and the design of an adaptive control system to increase robustness against changes in vehicle parameters. Also notable are research efforts to extend the scope of **4WS** control principles to cover a range of motion near the limits of vehicle performance.

From the viewpoint of providing a system that the driver can easily control both physically and mentally, some studies are being conducted to find desirable response characteristics for the 4WS as a closed-loop system, but we are afraid that quantitative research activities in this area have not yet achieved satisfactory results. It is strongly hoped that studies in this field will make further progress in the years to come so that the 4WS system's degrees of freedom will be used widely and effectively.

NOMENCLATURE

δ_{SW}	: steering wheel angle
δ_f	: steer angle of front wheels
δ_r	: steer angle of rear wheels
r	: yaw velocity
Y	: lateral acceleration
β	: vehicle body side-slip angle
$\dot{\beta}$	: vehicle body side-slip angular velocity ($= d\beta/dt$)
U_0	: forward velocity
n	: steering gear ratio of steering wheel to front wheels
k	: steer angle ratio of rear to front wheel
C_f	: front tire cornering stiffness
C_r	: rear tire cornering stiffness
F_1	: lateral force on front tires
F_2	: lateral force on rear tires
a	: distance from front axle to C.G.
b	: distance from rear axle to $C.G.$
ℓ	: wheel base ($= a + b$)
ζ	: damping ratio
ω_n	: undamped natural frequency

K	: stability factor
m	: vehicle mass
I_Z	: yawing moment of inertia
$G_y(0)$	: steady-state gain of lateral acceleration to front wheel steer angle
$G_r(0)$	: steady-state gain of yaw velocity to front wheel steer angle
$G_\beta(0)$	: steady-state gain of vehicle body side-slip angle to front wheel steer angle
T_1, T_2	: lead time constant in lateral acceleration response to front wheel steer angle
T_r	: lead time constant in yaw velocity response to front wheel steer angle
T_β	: lead time constant in vehicle body side-slip angle response to front wheel steer angle
λ_1, λ_2	increment ratio of lead time constant in lateral acceleration response
λ_r	: increment ratio of lead time constant in yaw velocity response
λ	: equivalent increment ratio of lead time constant in lateral acceleration response
G_β'	: steady-state gain of vehicle body side-slip angle to rear wheel steer angle
T_1', T_2'	: lead time constant in lateral acceleration response to rear wheel steer angle
T_r'	: lead time constant in yaw velocity response to rear wheel steer angle
T_β'	: lead time constant in vehicle body side-slip angle response to rear wheel steer angle
$\pounds[x]$	: Laplace transformation of x, (= X)
S	: Laplace operator

REFERENCES

1. Hirao, O., Kikuchi, E., and Yamada, N., "Improvement of the Handling Characteristics of a Vehicle Considered as a Man-Machine System", FISITA 11th International Congress, Miinchen, 1966.
2. Sano, S., Furukawa, Y., and Oguchi, Y., "The Effect of improved Vehicle Dynamics on Drivers Control Performance", 7th International Technical Conference on Experimental Safety Vehicles, Paris, 1979.
3. Whitehead, J. C., "Four Wheel Steering: Maneuverability and High Speed Stabilization", SAE paper 880642,1988.
4. Fujishiro, T., Ito, K., Kawabe, T., Kanai, K., and Ochi, Y., "A Study on the Stability of a Four Wheel Steering Vehicle As a Steering Torque Input System", Transactions of SICE (in Japanese), Vol. 25, No. 2, 1989.
5. Sano, S., Oguchi, Y., Nakaya, H., and Furukawa, Y., "Influence of Vehicle Response Parameters on Driver Control Performance", FISITA 18th International Congress, Hamburg, 1980.
6. Sano, S., Furukawa, Y., and Oguchi, Y., "Effects of Vehicle Response Characteristics and Driver's Skill Level on Task Performance and Subjective Raitings", 8th International Technical Conference on Experimental Safety Vehicles, Wolfsburg, 1980.
7. Nakaya, H. Sano, S., Furukawa, Y., and Oguchi, Y., "Effects of Vehicle Yaw and Lateral Acceleration Responses on Drivers Control Performance", FISITA 19th International Congress, Melbourne, 1982.
8. Furukawa, Y., and Nakaya, H., "Effects of Steering Response Characteristics on Control Performance of Driver-Vehicle System". JSAE Review.
9. Sano, S., Furukawa, Y., and Shiraishi, S., "Modification of Vehicle Handling Performance by Four-Wheel Steering System", 10th International Technical Conference on Experimental Safety Vehicles, Oxford, 1985.
10. Vanderploeg, M. J., Trom, J. d., and Bernard, J. E., "Evaluation of Four-Wheel Steer Path Following Performance Using a Linear Inverse Vehicle Model", SAE Paper 880644,1988.
11. Shibahata, Y., Irie, N., Ito, H., Uno, T., and Murata, M., "Effects of Rear Suspension Steer Properties on Handling and Stability", Proceeding of JSAE Conference (in Japanese), No. 8 15,1985.
12. Irie, N., Shibahata, Y., Ito, H., and Uno, T., "HICAS-Improvement of Vehicle Stability and Controllability by Rear Suspension Steering Characteristics", FISITA 21st International Congress, 1986.
13. Sano, S., Furukawa, Y., Nihei, T., Abe, M., and Serizawa, M., "Handling Characteristics of Steer Angle Dependent Four Wheel Steering System", SAE Paper 885034, FISITA 22nd International Congress, Dearborn, 1988.

14. Sano, S., Furukawa, Y., and Shiraishi, S., "Four Wheel Steering System with Rear Wheel Steer Angle Controlled as a Function of Steering Wheel Angle", SAE Paper 860625, 1986.
15. Takiguchi, T., Yasuda. N., Furutani, S., Kanazawa, H., and Inoue, H., "Improvement of Vehicle Dynamics by Vehicle-Speed-Sensing Four-Wheel Steering System", SAE paper 860624, 1986.
16. Takeuchi, S., Mimuro, T., Takada, H., and Yoshikawa, N., "Analysis of Transient Response Test". Journal of JSAE (in Japanese), Vol. 39, No. 11, 1985.
17. Fukui, K., Miki, K., Hayashi, Y., and Hasegawa, J., "Analysis of Driver and a Four Wheel Steering Vehicle System Using a Driving Simulator", SAE Paper 880641, 1988.
18. Hayashi, Y., Fukui, K., and Amano, Y., "Analysis of Driver/Four-Wheel-steered-vehicle System Using Characteristic Roots", Transaction of JSAE (in Japanese), No. 36, 1987.
19. Fukunaga, Y., Irie, N., Kuroki, J., and Sugasawa F., "Improved Handling and Stability Using Four-Wheel Steering", 11th International Technical Conference on Experimental Safety Vehicles, Washington D.C. 1987.
20. Mouri, H., Kuroki, J., Sugawara, F., and Irie, N., "Handling and Stability Improvement Achieved with Four-Wheel Steering", IMechE, C441/88, 1988.
21. Nalecz, A. G., and Bindemann, A. C., "Investigation into the Stability of Four Wheel Steering Vehicles", International Journal of Vehicle Design, Vol. 9, No. 2, 1988.
22. Nalecz, A. G., and Bindemann, A. C., "Analysis of the Dynamic Response of Four Wheel Steering Vehicles at High Speed", International Journal of Vehicle Design, Vol. 9, No. 2, 1988.
23. Sato, H., Hirota, A., Yanagisawa, H., and Fukushima, T., "Dynamic Characteristics of a Whole Wheel Steering Vehicle with Yaw Velocity Feedback Rear Wheel Steering", IMechE, C124/83, 1983.
24. Okada, T., and Takagi, T., "On Automobile Control and Stability", Journal of JSAE (in Japanese), Vol. 11 No. 3,1964.
25. Iguchi, M., "A Cooperative Steering Control between Front and Rear Wheels in Four-Wheel-Steering Cars", JSAE Review, Vol. 8, No. 2, 1987.
26. Leucht, P. M., "Active Four-Wheel-Steering Design for the Blazer XT-1", SAE Paper 872285, 1987.
27. United States Patent No. 4,313,514, 1982.
28. Sano, S., Miyoshi, T., and Furukawa, Y., "Operational and Design Features of the Steer Angle Dependent Four Wheel Steering System", 11th International Technical Conference on Experimental Safety Vehicles, Washington D.C., 1987.
29. Bernard, J. E., Vanderploeg, M. J., and Shannan, J. E., "Linear Analysis of a Vehicle with Four-Wheel Steering", SAE Paper 880643.
30. Senger, K. H., "A Velocity Dependent Steering Gear Ratio for Four-Wheel Steered Vehicle", I Mech E, C438/88, 1988.
31. Shibahata, Y., Irie, N., Ito, H., and Nakamura, K., "The Development for an Experimental Four-Wheel-Steering Vehicle", SAE Paper 860623.
32. Hata, N., Hasegawa, S., Takahashi, S., Ito, K., and Fujishiro, T., "A Control Method to Decrease Rear-end Projection of 4WS Vehicle", Proceedings of JSAE (in Japanese), No. 882105, 1988.
33. Ito, M., Fujishiro, T., Kanai, K., and Ochi, Y., "Four Wheel Steering System Synthesized by Model Matching Control", IEE-IMechE 6th International Conference on Automotive Electronics, London, 1987.
34. Fujishiro, T., Ito, K., Kanai, K., and Ochi, Y., "Four-Wheel Steering System Employing Model-following Control", Journal of JSAE (in Japanese), Vol. 4 No. 3, 1988.
35. Nagai, M., and Ohki, M., "Theoretical Study on Active Four-Wheel-Steering System by Virtual Vehicle Model Following Control", JSAE Review, Vol. 9, No. 4, 1988.
36. Nagai, M., and Ohki, M., "Study on 4WS Systems by Virtual-Car Model Following Control (2nd Report)", Proceedings of JSAE (in Japanese), No. 881042. 1988.
37. Nametz, J. E., Smits, R. E., and Sigman, D. R., "The Design and Testing of a Microprocessor Controlled Four Wheel Steer Concept Car", SAE Paper 885087, FISITA 22nd International Congresss, Dearborn, 1988.
38. Matsushita, Y., Yuhara, N., and Arato, Y., "Modeling of Vehicle and Improvement of Handling Quality by Adaptive Front-Wheel Steering Control System", Transaction of JSAE (in Japanese), No. 36,1986.

39. Kanai, K., Uchikado, S., Fujishiro, T., Ito, K., and Kawabe, T., "Design of Adaptive Yaw Rate Control System of a Car", Transaction of SICE (in Japanese), Vol. 23, No. 8, 1987.
40. Abe, M., "Handling Characteristics of All Wheel Active Steer Vehicle over Full Maneuvering ranges of Lateral and Longitudinal Accelerations", Proceedings of JSAE (in Japanese), No. 882103, 1988.
41. Lugner, P., Mittermayr, P., and Endlicher. K. O., "Theoretical Investigations on the Behaviour of a Car with Additional Four-Wheel Steering, at μ-Split Conditions", IMechE, C440/88, 1988.
42. "Mazda Speed-Sensing Four Wheel Steering", Press Information of Mazda Motor Co., 1987.
43. Tanaka, T., Tani, M., Yuasa, H., Mimuro, T., and Yoshida, H., "Active Control Technology for Passenger Car", SAE Paper 8855105, FISITA 22nd International Congress, Dearborn, 1988.